SANITEC

Primy

Brand :	Primy, China
Name :	RHINE shower pipe with ohs, hs & spout
Item Code :	PF2152
Designer :	
Color / Finish:	304 Stainless Steel
Dimensions :	108mm spout projection

Product info:

- Single lever Shower pipe set
- Overhead shower
- Hand shower and spout

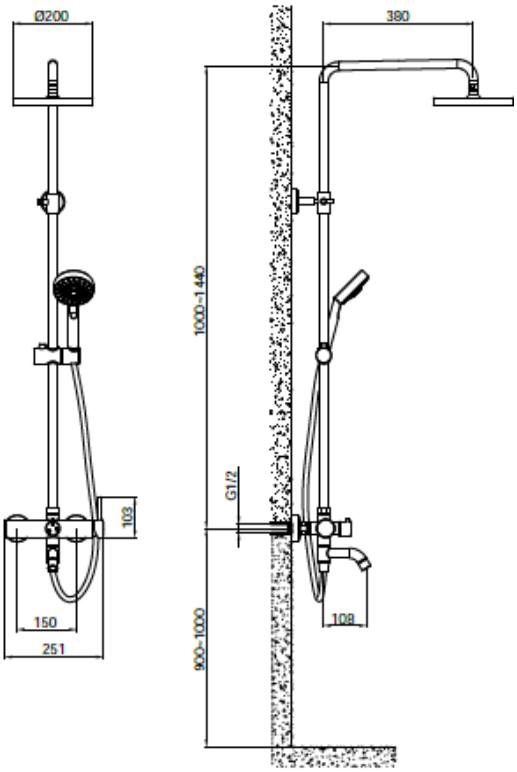

Flushing of pipe must be done before fittings are installed. Failure to do so voids the warranty.
Follow cleaning instructions and avoid using any harmful chemicals.
All information is for reference only. Installation shall always be based on the specs provided with actual delivered items.
For more info, visit **www.sanitecph.com**