Brand :	KOHLER
Name :	Taut Bath/Shower Valve with diverter
Item Code :	K-78980T-DR-BL
Designer :	
Color / Finish:	Matt Black
Dimensions :	(See data drawing below for dimensions)

Product info:

- Bath/Shower Valve
- With Diverter
- Requires K-78987T-4-BL

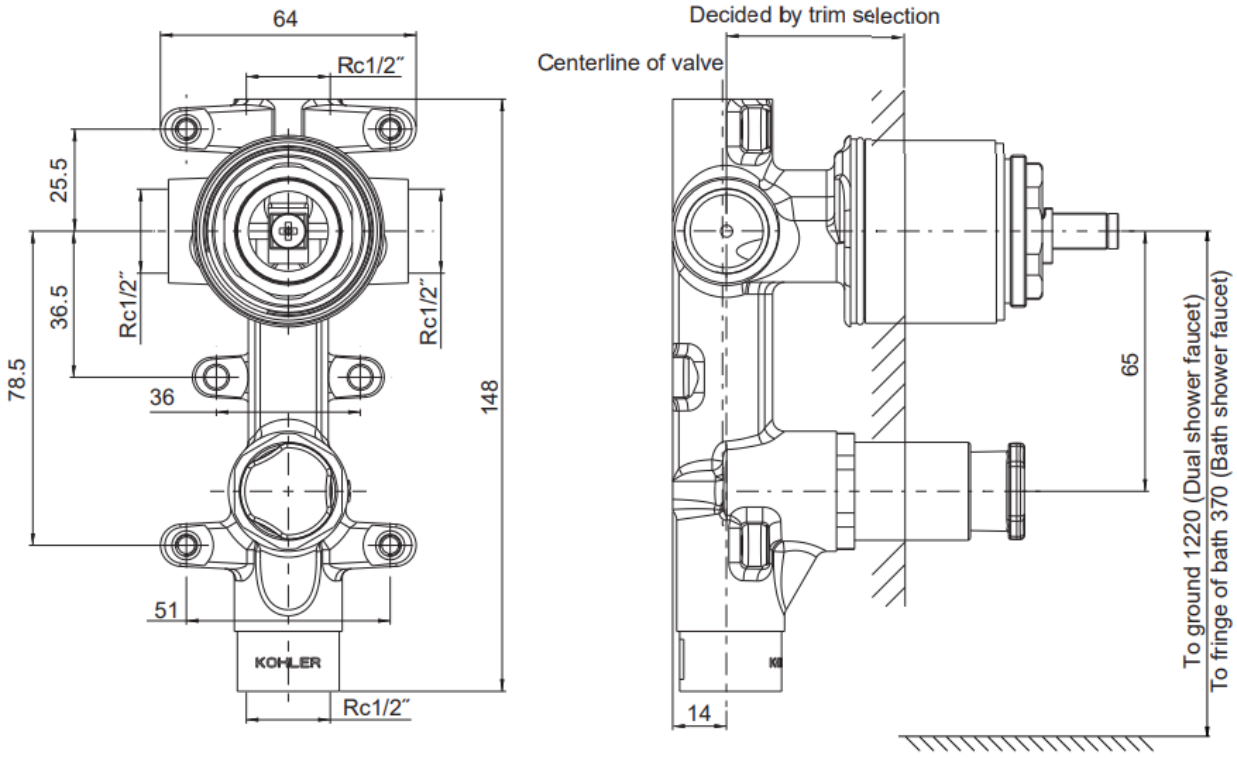

Flushing of pipe must be done before fittings are installed. Failure to do so voids the warranty.
Follow cleaning instructions and avoid using any harmful chemicals.
All information is for reference only. Installation shall always be based on the specs provided with actual delivered items.
For more info, visit **www.sanitecph.com**