SANITEC

COTTO
Share the World...Pleasure

Brand :	COTTO, Thailand
Name :	SCIRROCO Washbowl mixer w/pop-up and flex hose
Item Code :	CT2144AY
Designer :	
Color / Finish:	Plated Chrome
Dimensions :	210 mm length 251 mm height

Product info:

- Single Lever tall basin mixer for washbowl
- With pop up and waste

Add-ons:

- 2x angle valve ½"x½" (no nut)
- 1x basin waste strainer or pop-up
- 1x basin waste trap

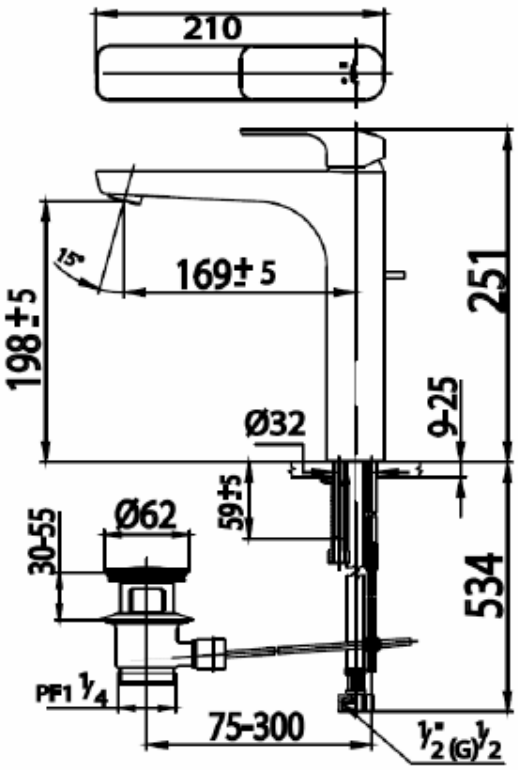

Flushing of pipe must be done before fittings are installed. Failure to do so voids the warranty.
Follow cleaning instructions and avoid using any harmful chemicals.
All information is for reference only. Installation shall always be based on the specs provided with actual delivered items.
For more info, visit **www.sanitecph.com**